Project 1

Car Jack Assembly

In this project, you will create components for a Car Jack assembly and then assemble them, refer to Figure P1-1. An exploded view of the assembly is shown in Figure P1-2. You need to create all the components as separate part files. The views and dimensions of the components are shown in Figures P1-3 through P1-10. **(Expected time: 3 hr 30 min)**

You can also download the model files for your reference from www.cadcim.com. To download the files, use the following path: *Textbooks > CAD/CAM > SOLIDWORKS > SOLIDWORKS 2025 for Designers> Projects for Free Download > Project 1*

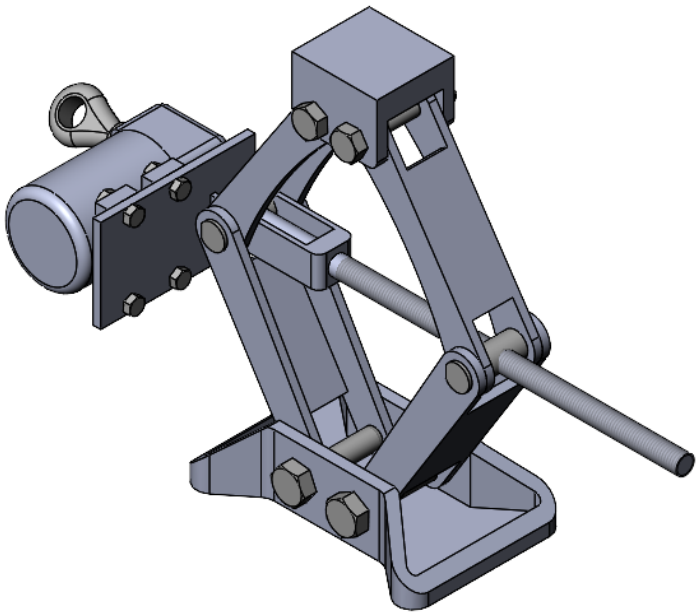

Figure P1-1

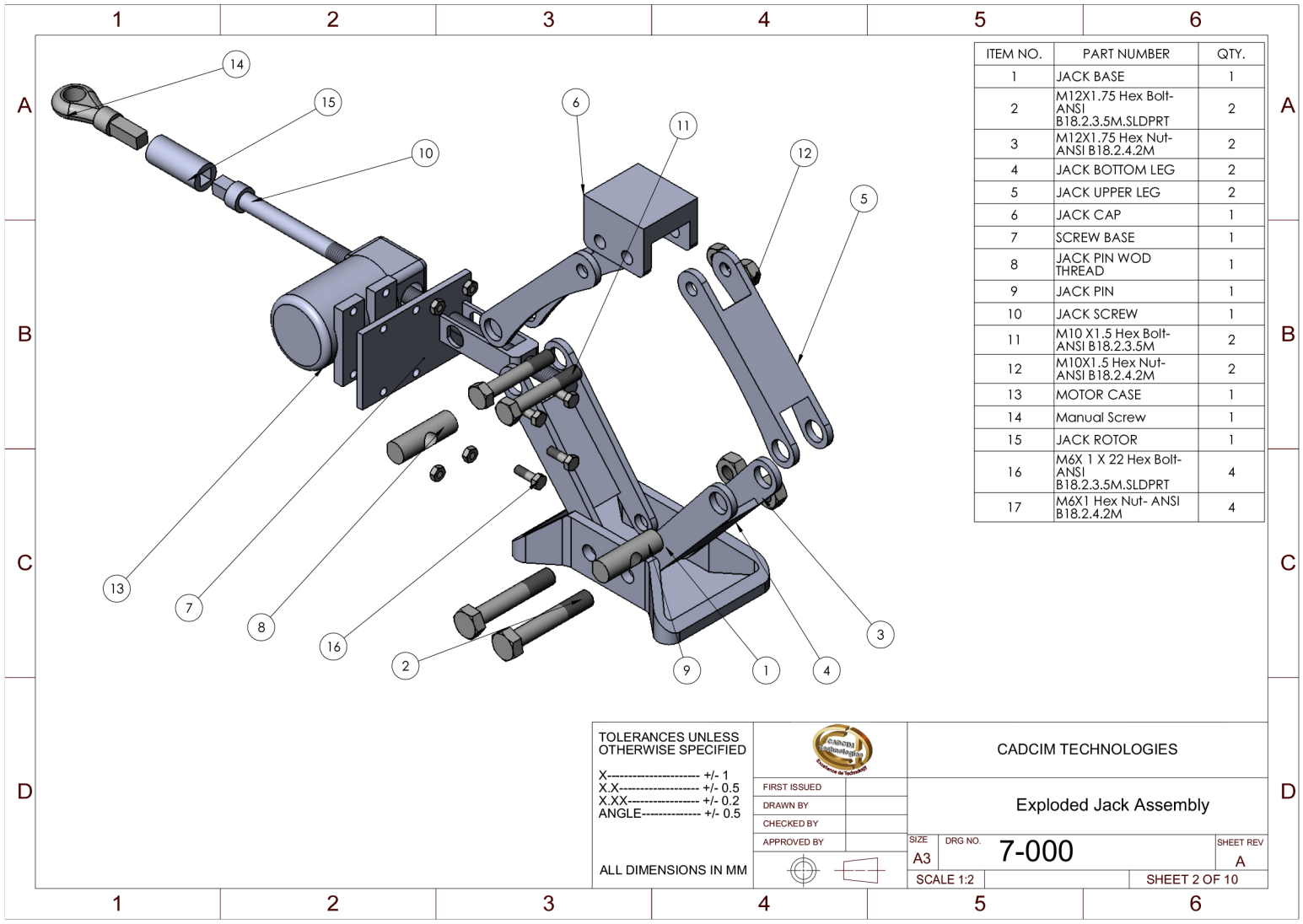

ITEM NO.	PART NUMBER	QTY.
1	JACK BASE	1
2	M12X1.75 Hex Bolt-ANSI B18.2.3.5M.SLDPRT	2
3	M12X1.75 Hex Nut-ANSI B18.2.4.2M	2
4	JACK BOTTOM LEG	2
5	JACK UPPER LEG	2
6	JACK CAP	1
7	SCREW BASE	1
8	JACK PIN WOD THREAD	1
9	JACK PIN	1
10	JACK SCREW	1
11	M10 X1.5 Hex Bolt-ANSI B18.2.3.5M	2
12	M10X1.5 Hex Nut-ANSI B18.2.4.2M	2
13	MOTOR CASE	1
14	Manual Screw	1
15	JACK ROTOR	1
16	M6X 1 X 22 Hex Bolt-ANSI B18.2.3.5M.SLDPRT	4
17	M6X1 Hex Nut- ANSI B18.2.4.2M	4

TOLERANCES UNLESS OTHERWISE SPECIFIED

X---------- +/- 1
X.X---------- +/- 0.5
X.XX---------- +/- 0.2
ANGLE---------- +/- 0.5

ALL DIMENSIONS IN MM

CADCIM TECHNOLOGIES

FIRST ISSUED
DRAWN BY
CHECKED BY
APPROVED BY

Exploded Jack Assembly

SIZE A3 | DRG NO. 7-000 | SHEET REV A

SCALE 1:2 | SHEET 2 OF 10

Figure P1-2

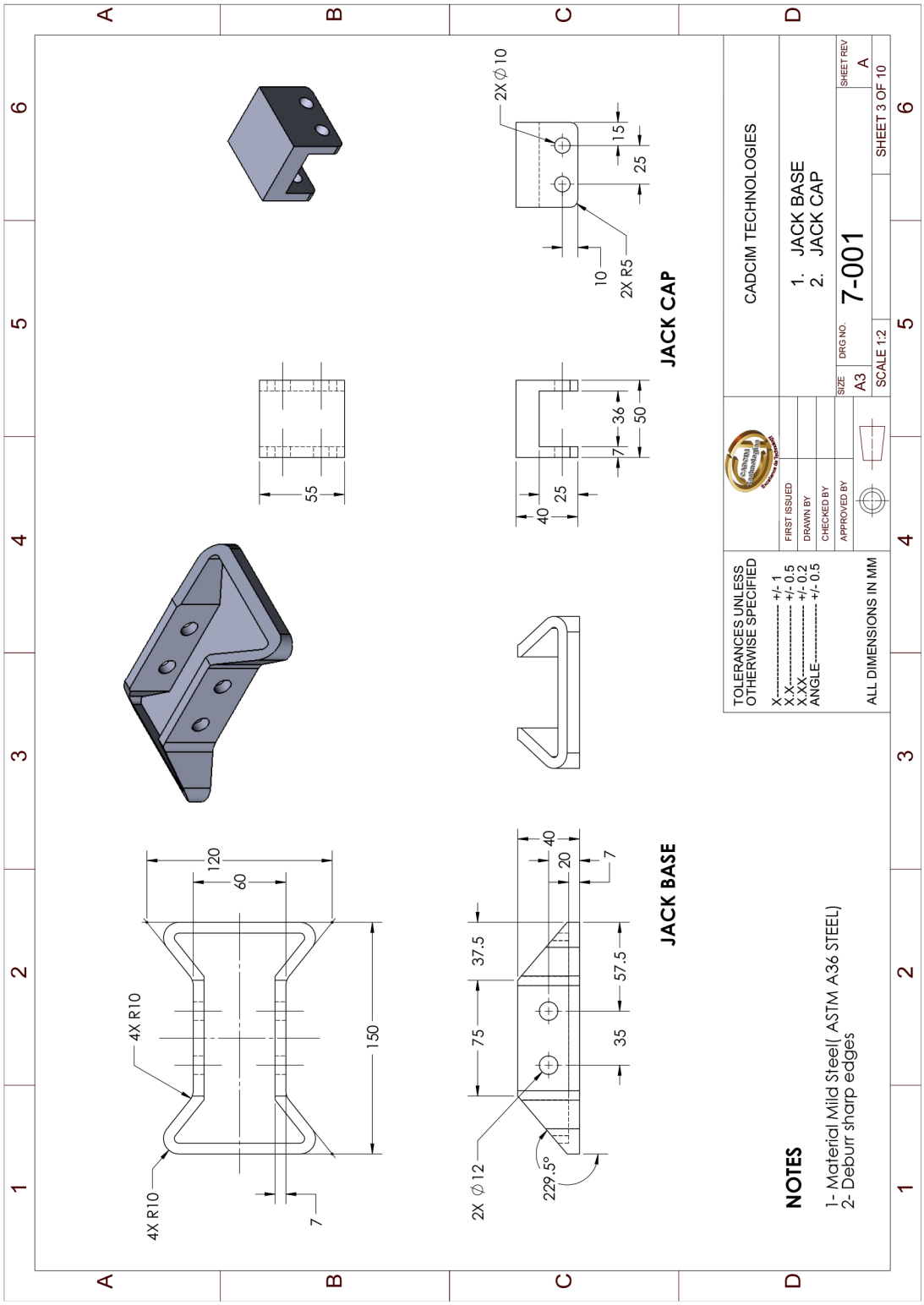
JACK BASE
JACK CAP
NOTES
1- Material Mild Steel(ASTM A36 STEEL)
2- Deburr sharp edges
TOLERANCES UNLESS OTHERWISE SPECIFIED
X ---------- +/- 1
X.X ---------- +/- 0.5
X.XX ---------- +/- 0.2
ANGLE ---------- +/- 0.5
ALL DIMENSIONS IN MM
FIRST ISSUED
DRAWN BY
CHECKED BY
APPROVED BY
CADCIM TECHNOLOGIES
1. JACK BASE
2. JACK CAP
SIZE A3
DRG NO. 7-001
SCALE 1:2
SHEET REV A
SHEET 3 OF 10

Figure P1-3

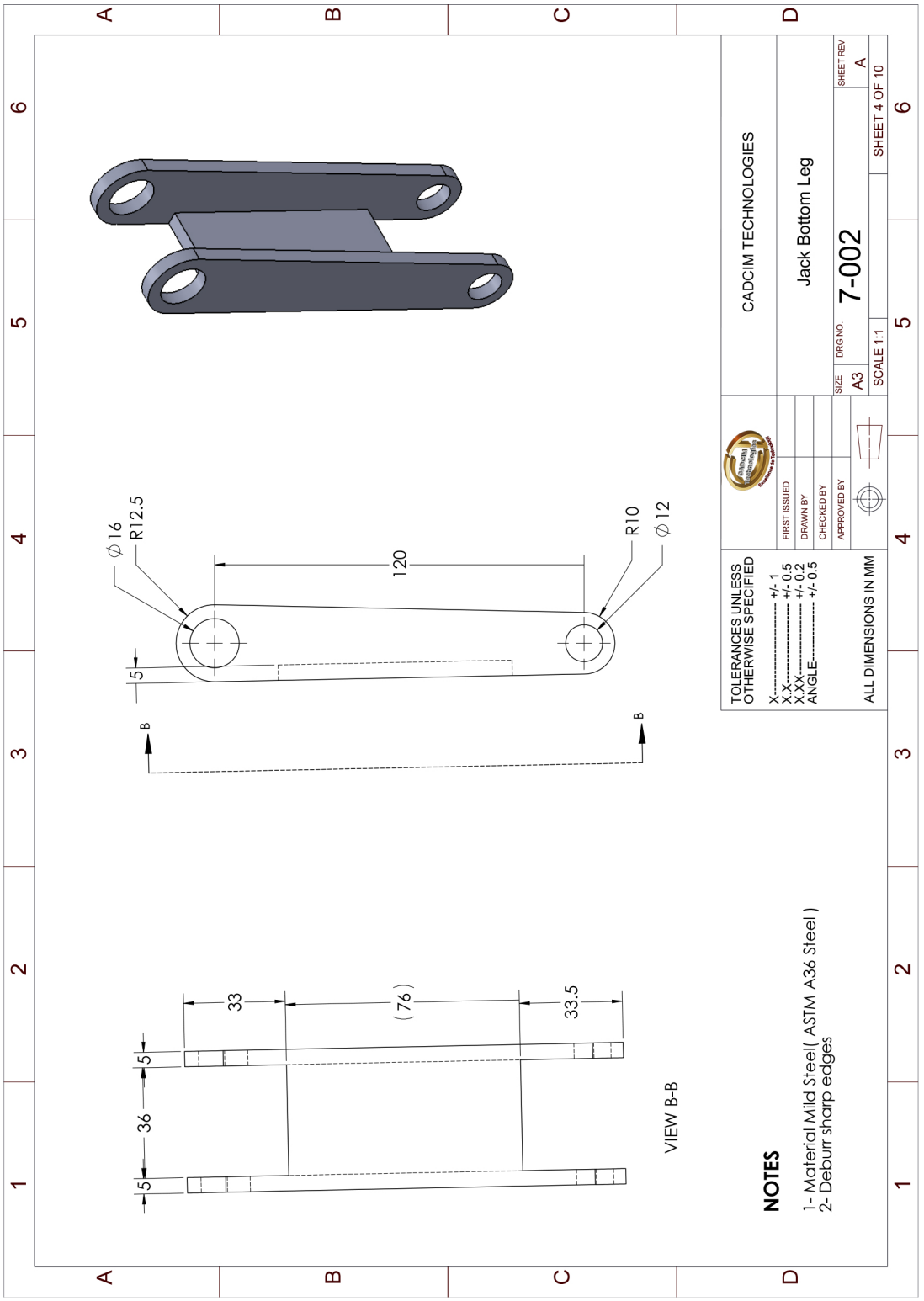
CADCIM TECHNOLOGIES
Jack Bottom Leg
SIZE A3
DRG NO. 7-002
SHEET REV A
SCALE 1:1
SHEET 4 OF 10
FIRST ISSUED
DRAWN BY
CHECKED BY
APPROVED BY
TOLERANCES UNLESS OTHERWISE SPECIFIED
X---------- +/- 1
X.X---------- +/- 0.5
X.XX---------- +/- 0.2
ANGLE---------- +/- 0.5
ALL DIMENSIONS IN MM
Ø16
R12.5
120
R10
Ø12
5
B
B
33
(76)
33.5
5
36
5
VIEW B-B
NOTES
1- Material Mild Steel(ASTM A36 Steel)
2- Deburr sharp edges

Figure P1-4

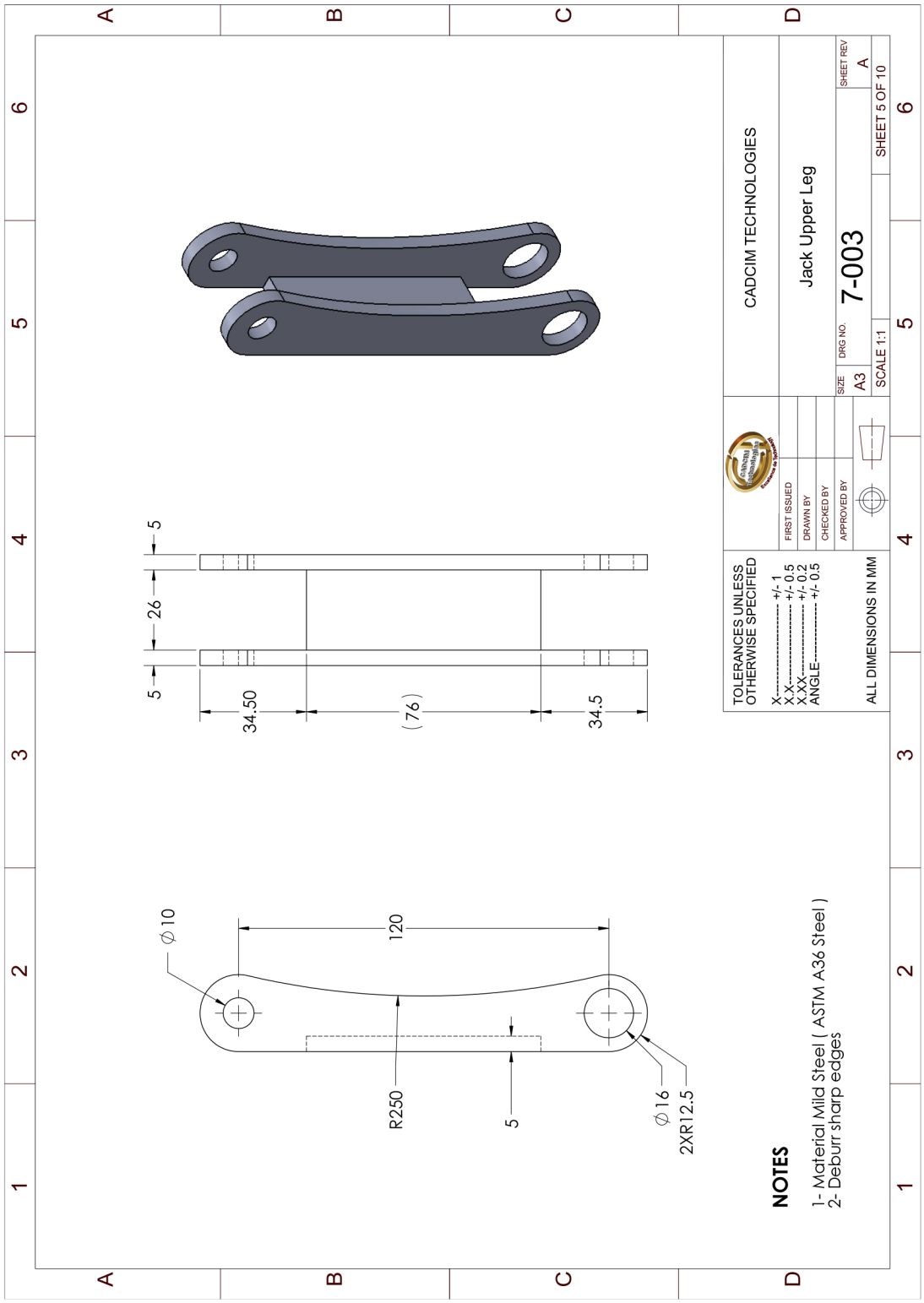
CADCIM TECHNOLOGIES
Jack Upper Leg
7-003
SIZE A3
DRG NO.
SCALE 1:1
SHEET 5 OF 10
SHEET REV A
TOLERANCES UNLESS OTHERWISE SPECIFIED
X +/- 1
X.X +/- 0.5
X.XX +/- 0.2
ANGLE +/- 0.5
ALL DIMENSIONS IN MM
FIRST ISSUED
DRAWN BY
CHECKED BY
APPROVED BY
5
26
5
34.50
(76)
34.5
Ø10
120
R250
5
Ø16
2XR12.5
NOTES
1- Material Mild Steel (ASTM A36 Steel)
2- Deburr sharp edges

Figure P1-5

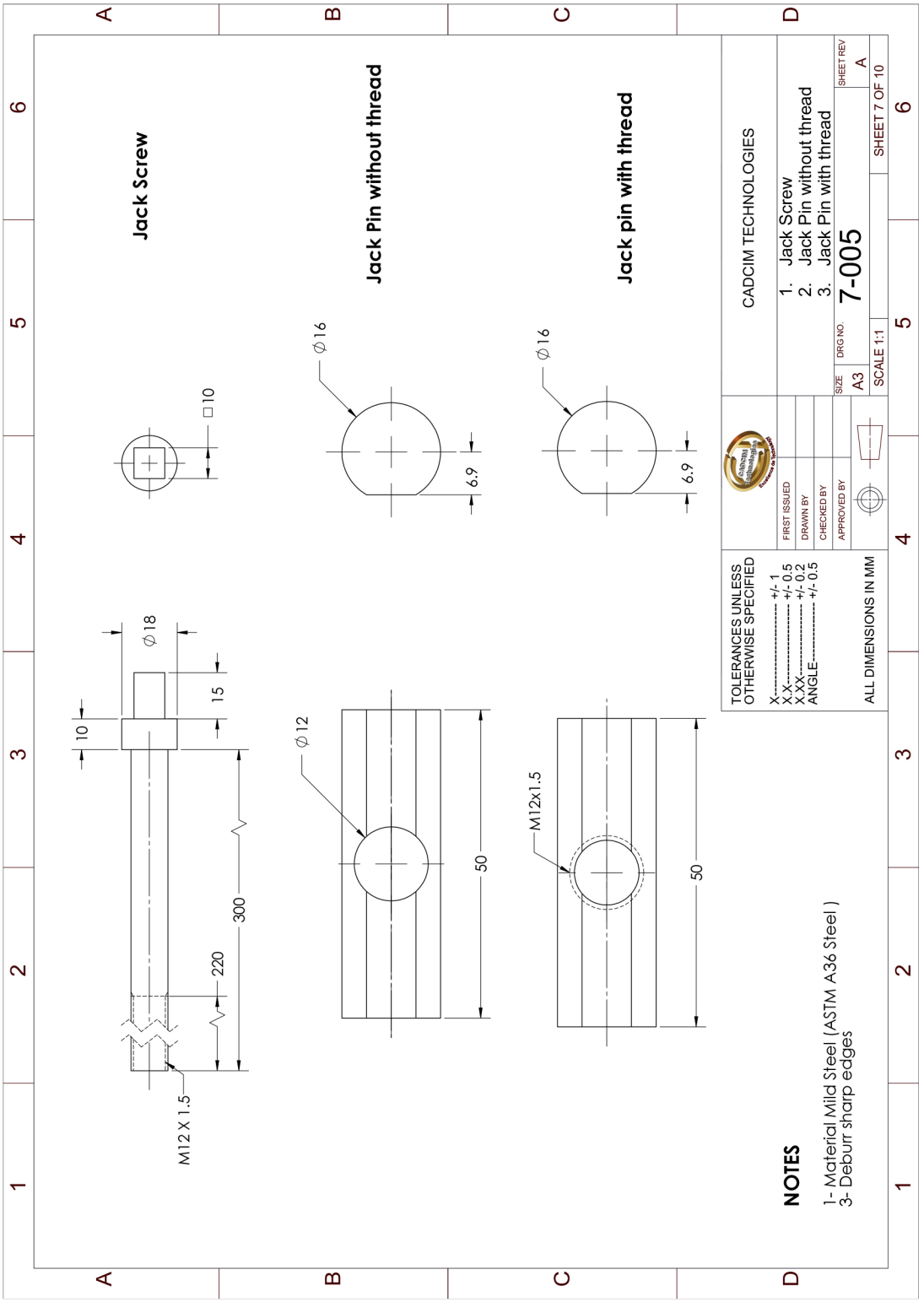
Jack Screw
Jack Pin without thread
Jack pin with thread
□10
Ø16
Ø16
6.9
6.9
Ø18
15
10
Ø12
M12x1.5
50
50
300
220
M12 X 1.5
NOTES
1- Material Mild Steel (ASTM A36 Steel)
3- Deburr sharp edges
TOLERANCES UNLESS OTHERWISE SPECIFIED
X---------- +/- 1
X.X---------- +/- 0.5
X.XX---------- +/- 0.2
ANGLE---------- +/- 0.5
ALL DIMENSIONS IN MM
FIRST ISSUED
DRAWN BY
CHECKED BY
APPROVED BY
CADCIM TECHNOLOGIES
1. Jack Screw
2. Jack Pin without thread
3. Jack Pin with thread
SIZE A3
DRG NO. 7-005
SHEET REV A
SCALE 1:1
SHEET 7 OF 10

Figure P1-6

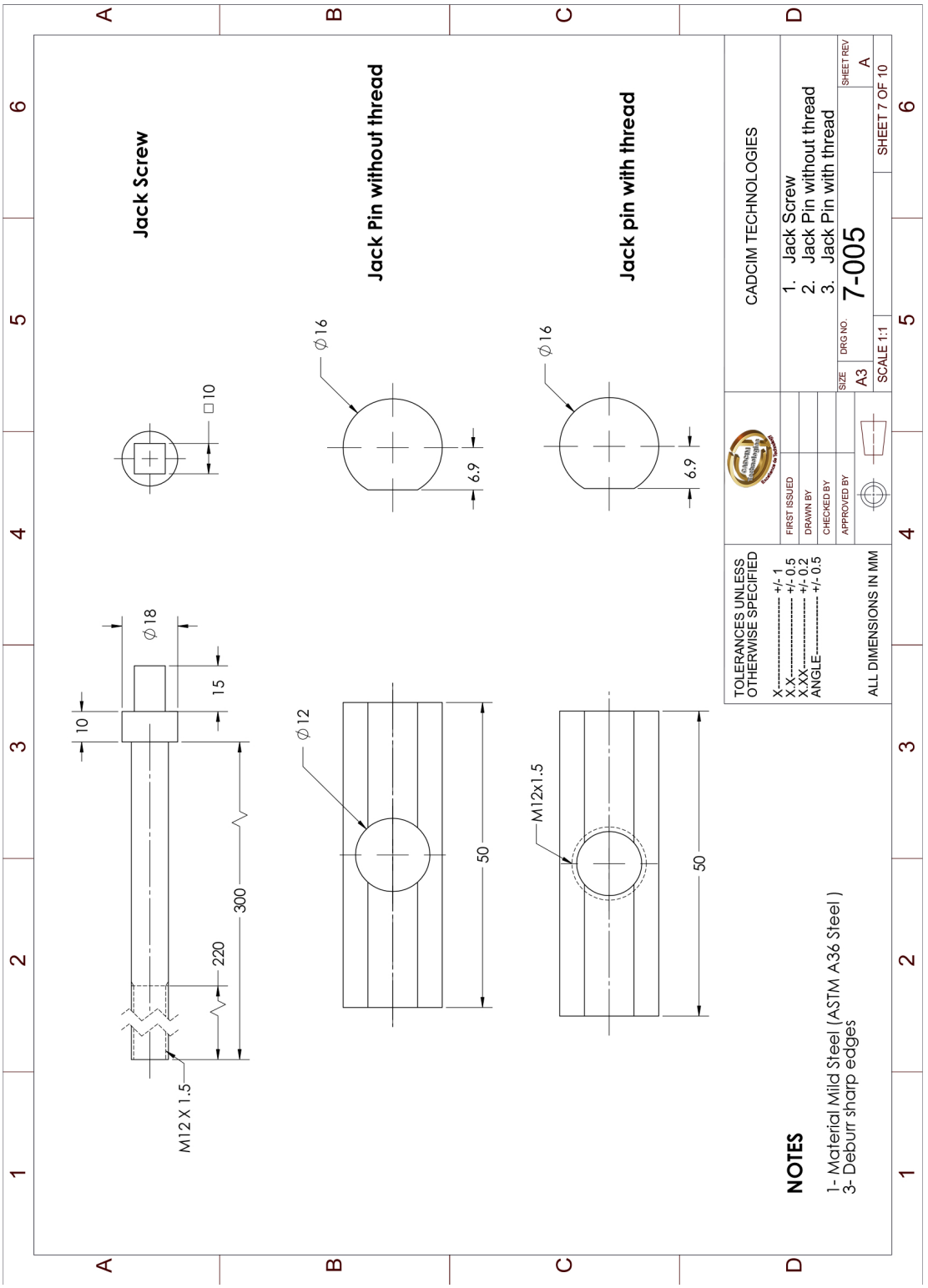
Jack Screw
Jack Pin without thread
Jack pin with thread
M12 X 1.5
220
300
15
10
18
10
12
50
16
6.9
M12x1.5
50
16
6.9
NOTES
1- Material Mild Steel (ASTM A36 Steel)
3- Deburr sharp edges
ALL DIMENSIONS IN MM
TOLERANCES UNLESS OTHERWISE SPECIFIED
X ---------- +/- 1
X.X ---------- +/- 0.5
X.XX ---------- +/- 0.2
ANGLE ---------- +/- 0.5
FIRST ISSUED
DRAWN BY
CHECKED BY
APPROVED BY
CADCIM TECHNOLOGIES
1. Jack Screw
2. Jack Pin without thread
3. Jack Pin with thread
SIZE
A3
DRG NO.
7-005
SHEET REV
A
SCALE 1:1
SHEET 7 OF 10

Figure P1-7

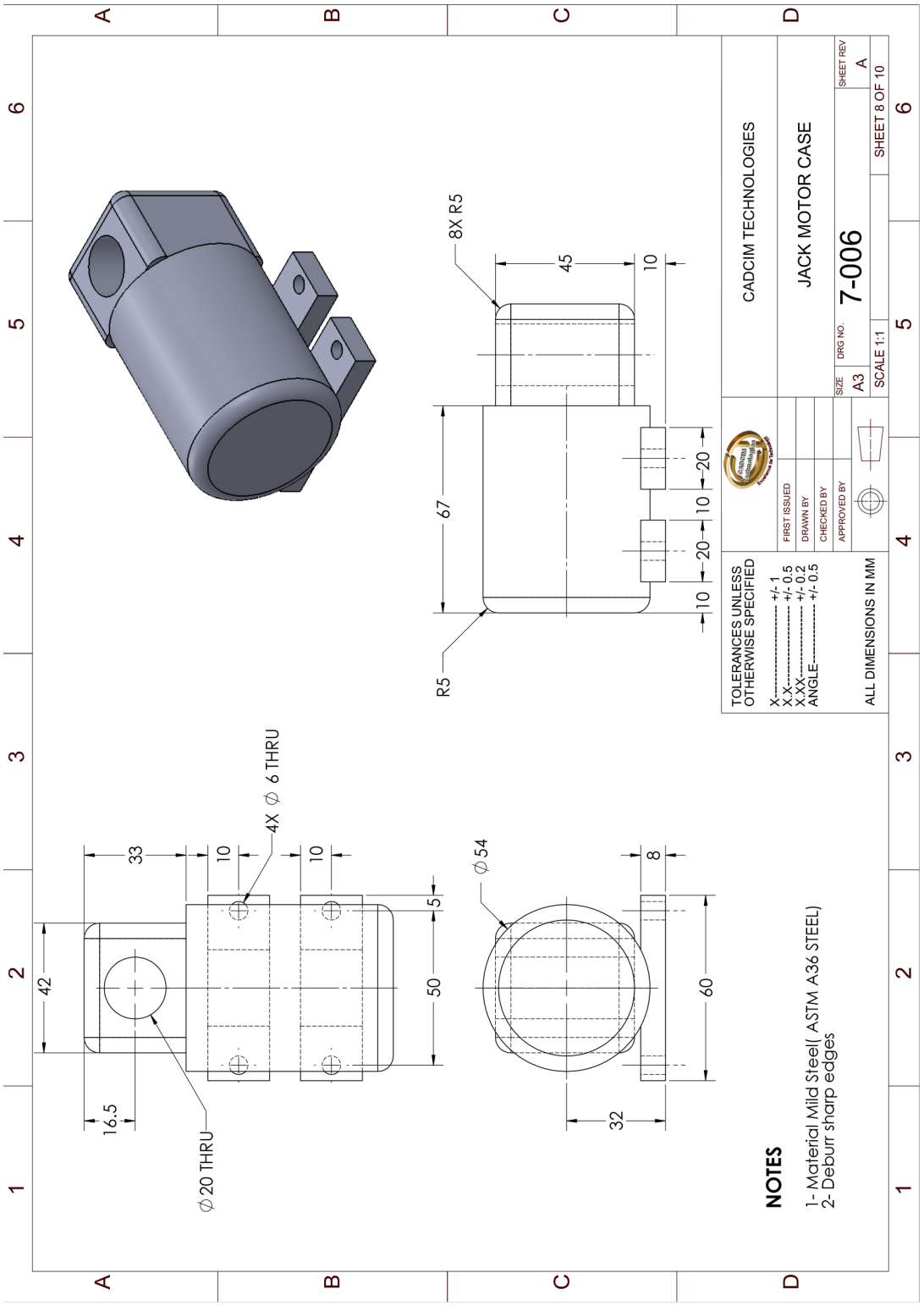
A
B
C
D
1
2
3
4
5
6
8X R5
45
10
67
20
10
20
10
R5
4X ⌀ 6 THRU
33
10
10
42
16.5
⌀ 20 THRU
50
5
⌀ 54
8
60
32
NOTES
1- Material Mild Steel(ASTM A36 STEEL)
2- Deburr sharp edges
TOLERANCES UNLESS OTHERWISE SPECIFIED
X ---------- +/- 1
X.X ---------- +/- 0.5
X.XX ---------- +/- 0.2
ANGLE ---------- +/- 0.5
ALL DIMENSIONS IN MM
FIRST ISSUED
DRAWN BY
CHECKED BY
APPROVED BY
CADCIM TECHNOLOGIES
JACK MOTOR CASE
SIZE A3
DRG NO. 7-006
SHEET REV A
SCALE 1:1
SHEET 8 OF 10

Figure P1-8

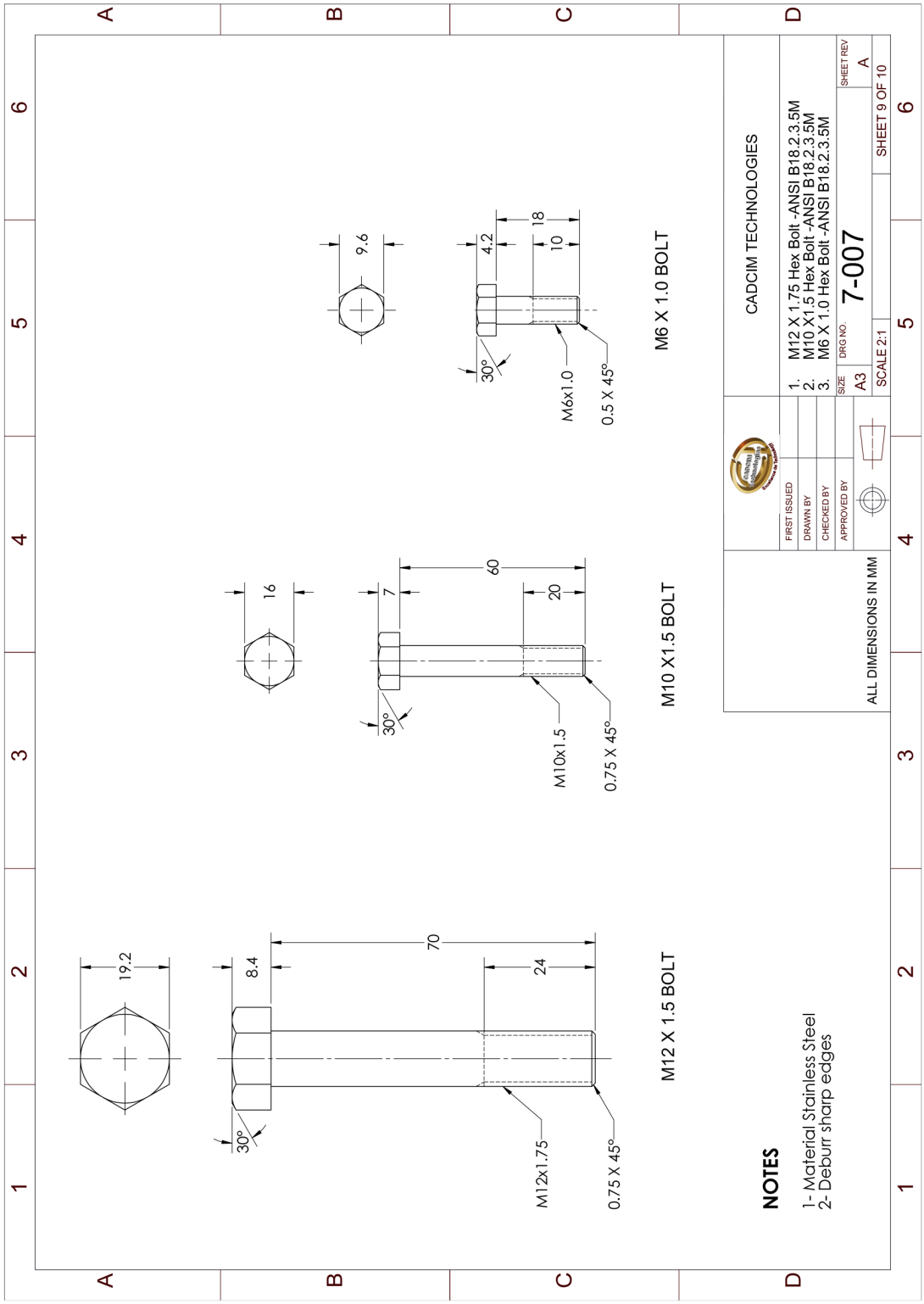
NOTES
1- Material Stainless Steel
2- Deburr sharp edges
M12 X 1.5 BOLT
M10 X1.5 BOLT
M6 X 1.0 BOLT
19.2
8.4
70
24
30°
M12x1.75
0.75 X 45°
16
7
60
20
M10x1.5
9.6
4.2
18
10
M6x1.0
0.5 X 45°
CADCIM TECHNOLOGIES
FIRST ISSUED
DRAWN BY
CHECKED BY
APPROVED BY
1. M12 X 1.75 Hex Bolt -ANSI B18.2.3.5M
2. M10 X1.5 Hex Bolt -ANSI B18.2.3.5M
3. M6 X 1.0 Hex Bolt -ANSI B18.2.3.5M
SIZE A3
DRG NO. 7-007
SHEET REV A
ALL DIMENSIONS IN MM
SCALE 2:1
SHEET 9 OF 10

Figure P1-9

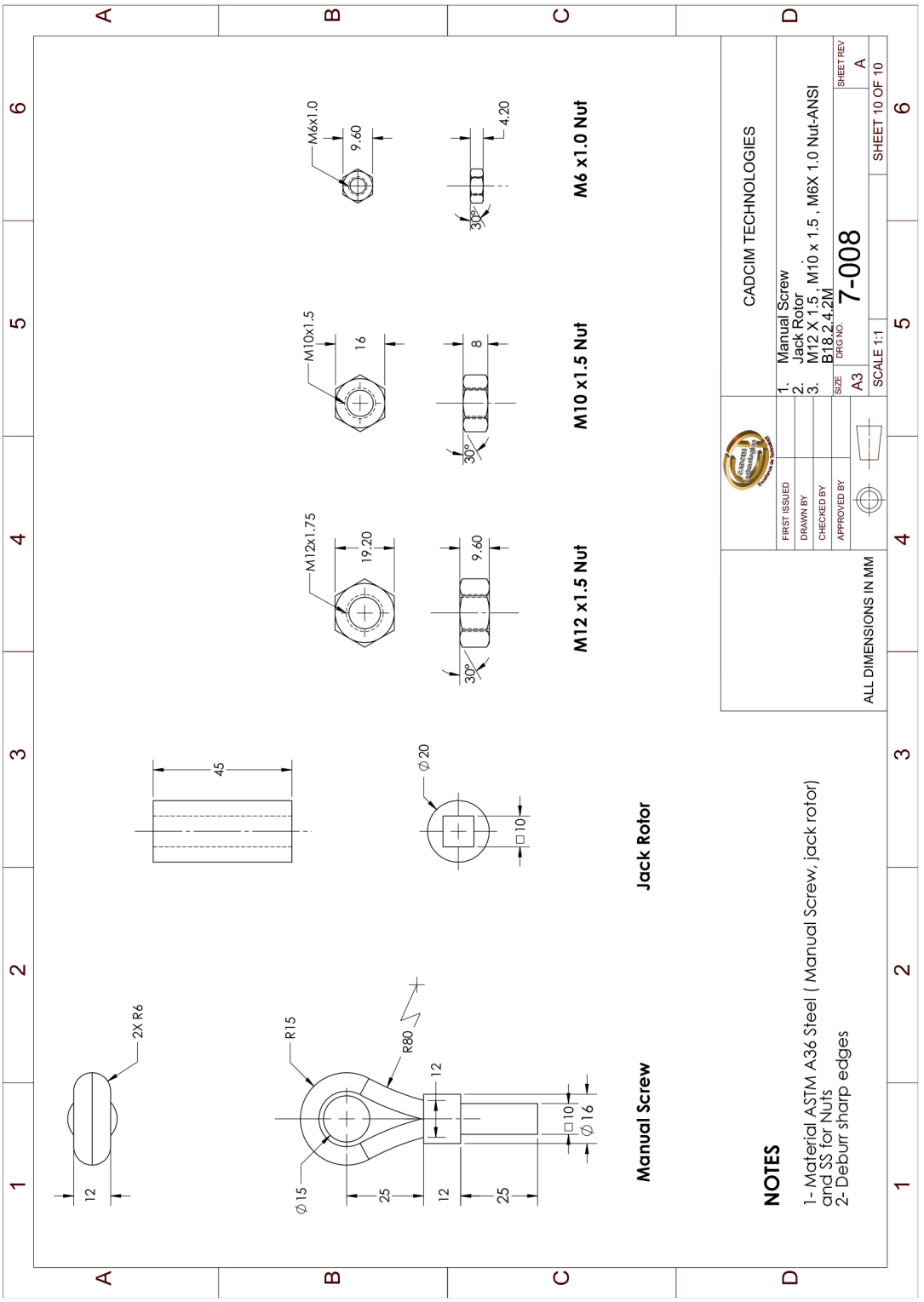
CADCIM TECHNOLOGIES
1. Manual Screw
2. Jack Rotor
3. M12 X 1.5 , M10 x 1.5 , M6X 1.0 Nut-ANSI B18.2.4.2M
DRG NO. 7-008
SIZE A3
SCALE 1:1
SHEET 10 OF 10
SHEET REV A
FIRST ISSUED
DRAWN BY
CHECKED BY
APPROVED BY
ALL DIMENSIONS IN MM
NOTES
1- Material ASTM A36 Steel (Manual Screw, jack rotor) and SS for Nuts
2- Deburr sharp edges
Manual Screw
Jack Rotor
M12 x1.5 Nut
M10 x1.5 Nut
M6 x1.0 Nut
2X R6
12
45
R15
R80
12
25
12
25
10
16
20
10
M12x1.75
19.20
9.60
30°
M10x1.5
16
8
30°
M6x1.0
9.60
4.20
30°

Figure P1-10